HPW102-20 ~ 6524-20 series

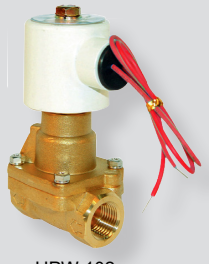

HPW 102

Symbol

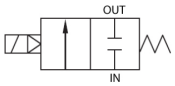

Eletrical connection

Nil	G	T	TZ	D	Z

How to Order

HPW [ ] 10 - 20 [ ] - [ ] - AC220V

① ② ③ ④ ⑤

① Port type

Nil	Rc(PT) (Standard)
G	G

② Orifice & Port size

	Orifice	Port size
102	Ø10	1/4
103	Ø10	3/8
154	Ø15	1/2
206	Ø20	3/4
2510	Ø25	1
3212	Ø32	1 1/4
4014	Ø40	1 1/2
5020	Ø50	2
6524	Ø65	2 1/2

③ Electrical connection

Nil	Console box (Standard)
G	Grommet coil
T	Console box + Terminal box
TZ	Console box + Terminal box (Lamp)
D	DIN coil + DIN connector
Z	DIN coil + DIN connector (Lamp)

④ Seal material

	Material	Applications
Nil	NBR	Standard
M	FPM	Chemical, Hot water 120℃
E	EPDM	Hot water 100℃

⑥ Rated voltage

AC110V	AC110V 60Hz
AC220V	AC220V 60Hz
DC12V	DC12V
DC24V	DC24V
AC100V	AC100V 50/60Hz
AC200V	AC200V 50/60Hz
AC110V-50Hz	AC 110V 50Hz
AC220V-50Hz	AC 220V 50Hz
AC240V-50Hz	AC 240V 50Hz
AC24V-50Hz	AC 24V 50Hz

Specifications

Classification	Standard	Option	Classification	Standard	Option
Fluid	Air, Water, Clean oil, Inert gas		Voltage	AC100V 50/60Hz AC110V 60Hz AC200V 50/60Hz AC220V 60Hz DC24V, 12V	AC110V 50Hz AC220V 50Hz AC240V 50Hz AC 24V 50Hz
Fluid temp.	0 ~ 60℃				
Ambient temp.	50℃ (Max.)				
Pressure range	0.5 ~ 20kgf/cm² (0.05 ~ 2MPa)		Allowable voltage fluctuation	±10%(AC), ±5% (DC)	
Coil insulation	Class B		Power consumption	AC, DC : 14W	
Electrical connection	Lead wire G(PF)1/2	Grommet coil Terminal box DIN connector	Body material	Brass	
Port size	Rc(PT) 1/4, 3/8, 1/2, 3/4, 1, 1 1/4, 1 1/2, 2, 2 1/2		Seal material	NBR + SUS 304 PISTON	EPDM FPM
Orifice	Refer to the table below		Weight	Refer to the table below	

Features

- Piston pilot type
- Normally closed type
- Decrease water hammering effect
- Fire resistant structure, high durability
- Waterproof(for fountain) type is available (DC24V)
- Can be used for maximum pressure of 20kgf/㎠

Applications

- Water piping
- Medical instrument
- High pressure cleaner
- Wire cutting machine
- Compressor

Dimensions

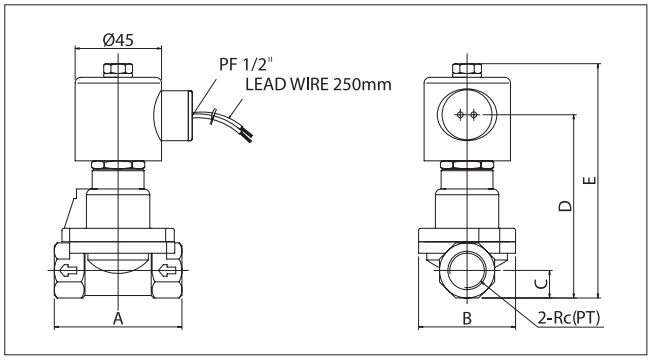

Model	A	B	C	D	E	Rc(PT)	Orifice	Weight (kg)
HPW 102-20	55	40	11	89	115	1/4	ø10	0.7
HPW 103-20	55	40	11	89	115	3/8	ø10	0.7
HPW 154-20	66	50	14	95	122	1/2	ø15	0.9
HPW 206-20	92	64	18.5	103	131	3/4	ø20	1.55
HPW 2510-20	92	65	21	115	137	1	ø25	1.57
HPW 3212-20	122	86	26	132	160	1 1/4	ø32	2.55
HPW 4014-20	123	87	29	142	164	1 1/2	ø40	2.75
HPW 5020-20	140	100	36	158	180	2	ø50	3.92
HPW 6524-20	166	153	49	214	240	2 1/2	ø65	8.3

HPW8030-20 series

HPW 8030-20

Symbol

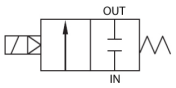

형식기호

HPW [ ] 80 30 - 20 - AC220V

① ② ③ ④

① Port type

Nil	Rc(PT) (Standard)
G	G

② Orifice

80	Ø80

③ Port size

30	3

④ Electrical connection

AC110V	AC110V 60Hz
AC220V	AC220V 60Hz
DC12V	DC12V
DC24V	DC24V
AC100V	AC100V 50/60Hz
AC200V	AC200V 50/60Hz
AC110V-50Hz	AC110V 50Hz
AC220V-50Hz	AC220V 50Hz
AC240V-50Hz	AC240V 50Hz
AC24V-50Hz	AC24V 50Hz

Specifications

Classification	Standard	Option	Classification	Standard	Option
Fluid	Air, Water, Clean oil, Inert gas		Voltage	AC100V 50/60Hz AC110V 60Hz AC200V 50/60Hz AC220V 60Hz DC24V, 12V	AC110V 50Hz AC220V 50Hz AC240V 50Hz AC 24V 50Hz
Fluid temp.	0 ~ 60℃				
Ambient temp.	50℃ (Max.)				
Pressure range	1.0 ~ 20kgf/㎠ (0.1 ~ 2MPa)		Allowable voltage fluctuation	±10%(AC), ±5%(DC)	
Coil insulation	Class B		Power consumption	AC, DC : 30W	
Electrical connection	Terminal box (Lead wire G(PF)1/2)		Body material	Brass	
Port size	Rc(PT) 3		Seal material	NBR + SUS 304 PISTON	EPDM FPM
Orifice	Ø80		Weight	21Kg	

Features

- Piston pilot type
- Normally closed type
- Can be used for maximum pressure of 20kgf/□
- Fire resistant structure, high durability

Applications

- Water piping
- Medical instrument
- High pressure cleaner
- Wire cutting machine
- Compressor
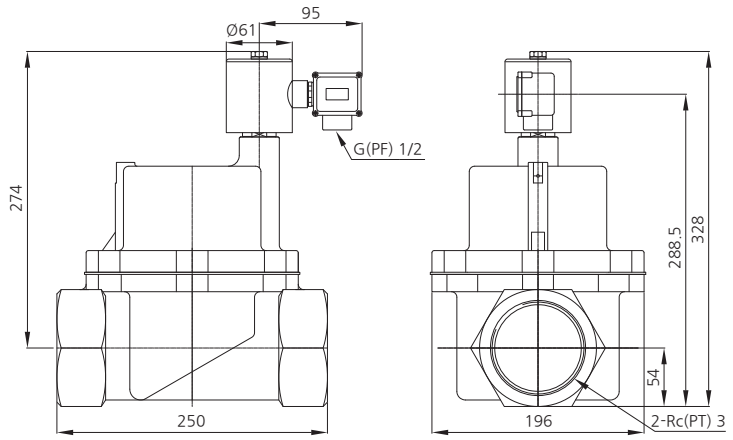
Dimensions