FJ series

Features

- Able to use vacuum pad on sloping surfaces.

How to Order

FJ - 20-M6

① ②

① Series

FJ	Vacuum floating joint

② Port size

Kinds	Port size	Remarks
20-M6	M6	KCC Ø20~Ø50 apply
60-M10	M10x1.5	KCC Ø60~Ø100 apply
60-G1/8	G1/8	Third party Ø60~Ø100 apply
125-M16	M16x1.5	KCC Ø125 apply
125-M16F	M16x1.5 (Female thread)	KCC Ø125 apply

Dimensions

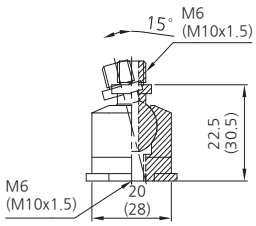

KCC Standard
Ø20~Ø50
(Ø60~Ø100)

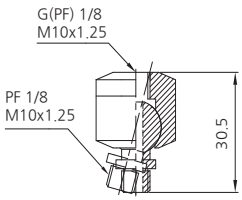

Third party
Ø60~Ø100

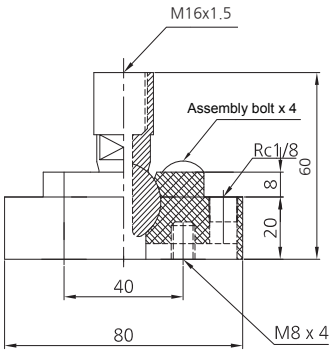

FJ125(Female thread)
Ø125~Ø220

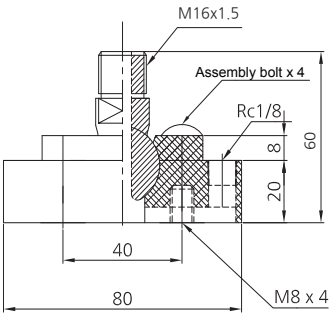

FJ125
Ø125~Ø220